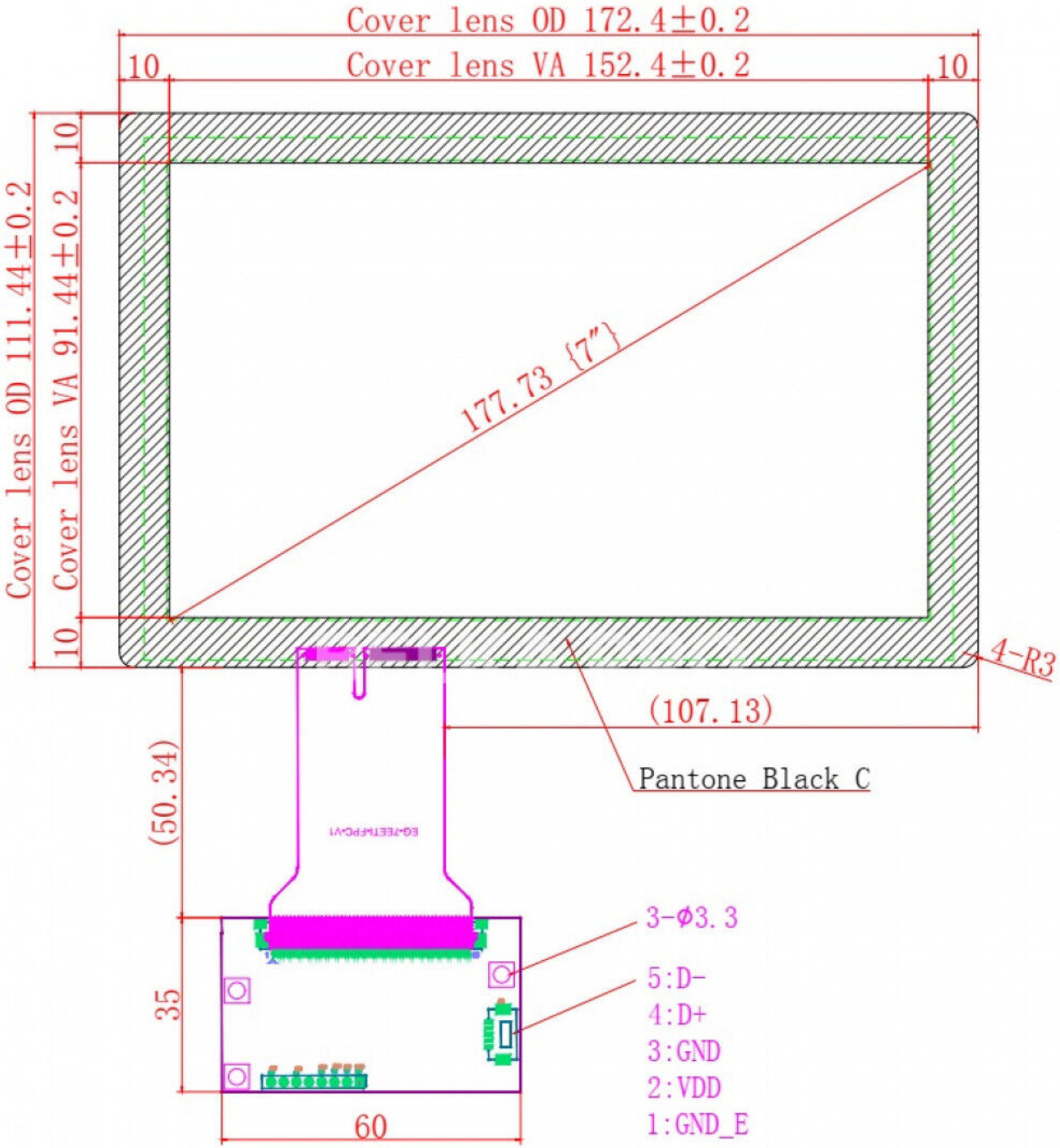
Cover lens OD 172.4±0.2
10
Cover lens VA 152.4±0.2
10
Cover lens OD 111.44±0.2
10
Cover lens VA 91.44±0.2
10
177.73 {7"}
4-R3
(107.13)
Pantone Black C
(50.34)
35
60
3-Φ3.3
5:D-
4:D+
3:GND
2:VDD
1:GND_E

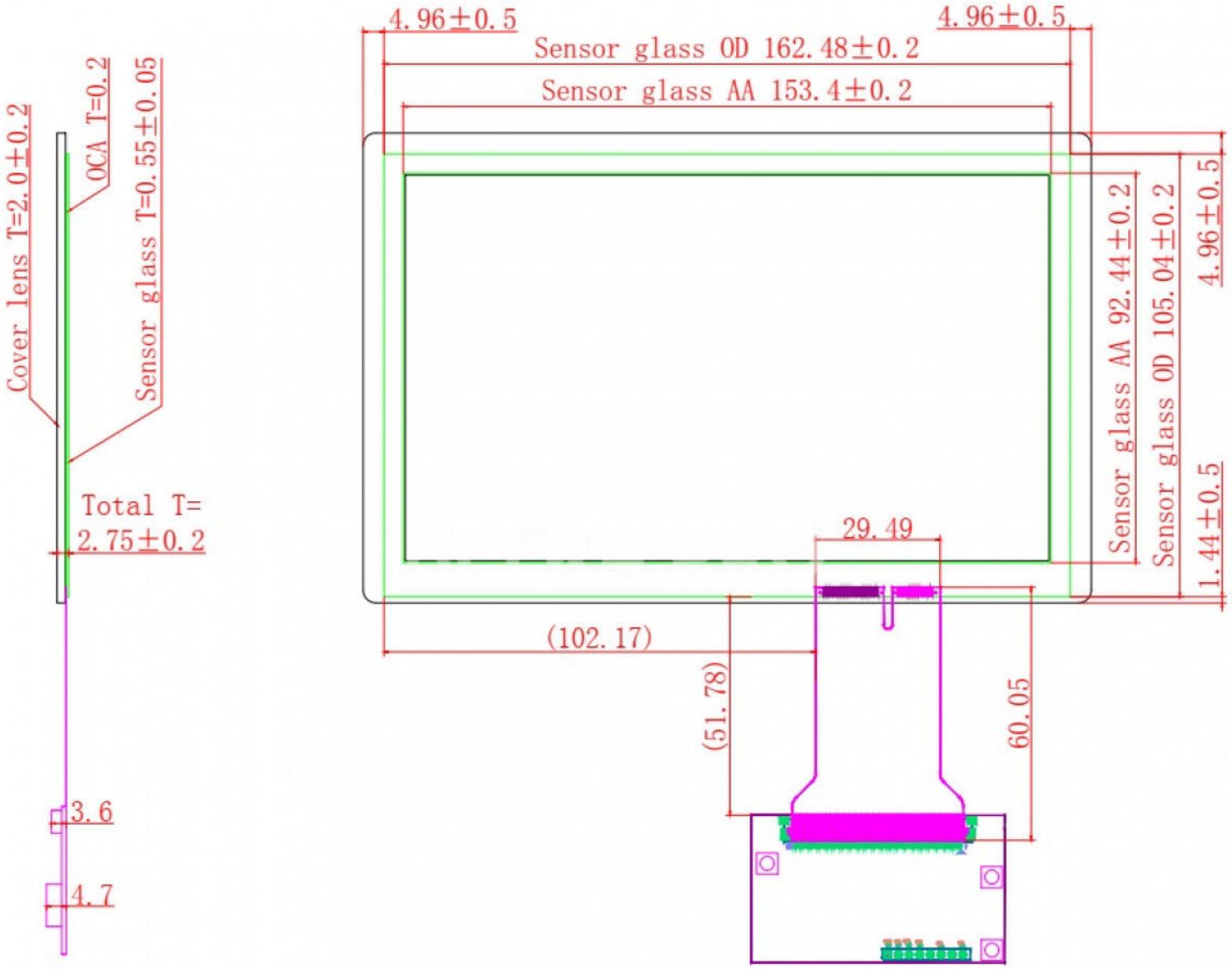
Cover lens T=2.0±0.2
OCA T=0.2
Sensor glass T=0.55±0.05
Total T=
2.75±0.2
3.6
4.7
4.96±0.5
4.96±0.5
Sensor glass OD 162.48±0.2
Sensor glass AA 153.4±0.2
Sensor glass AA 92.44±0.2
Sensor glass OD 105.04±0.2
4.96±0.5
1.44±0.5
29.49
(102.17)
(51.78)
60.05