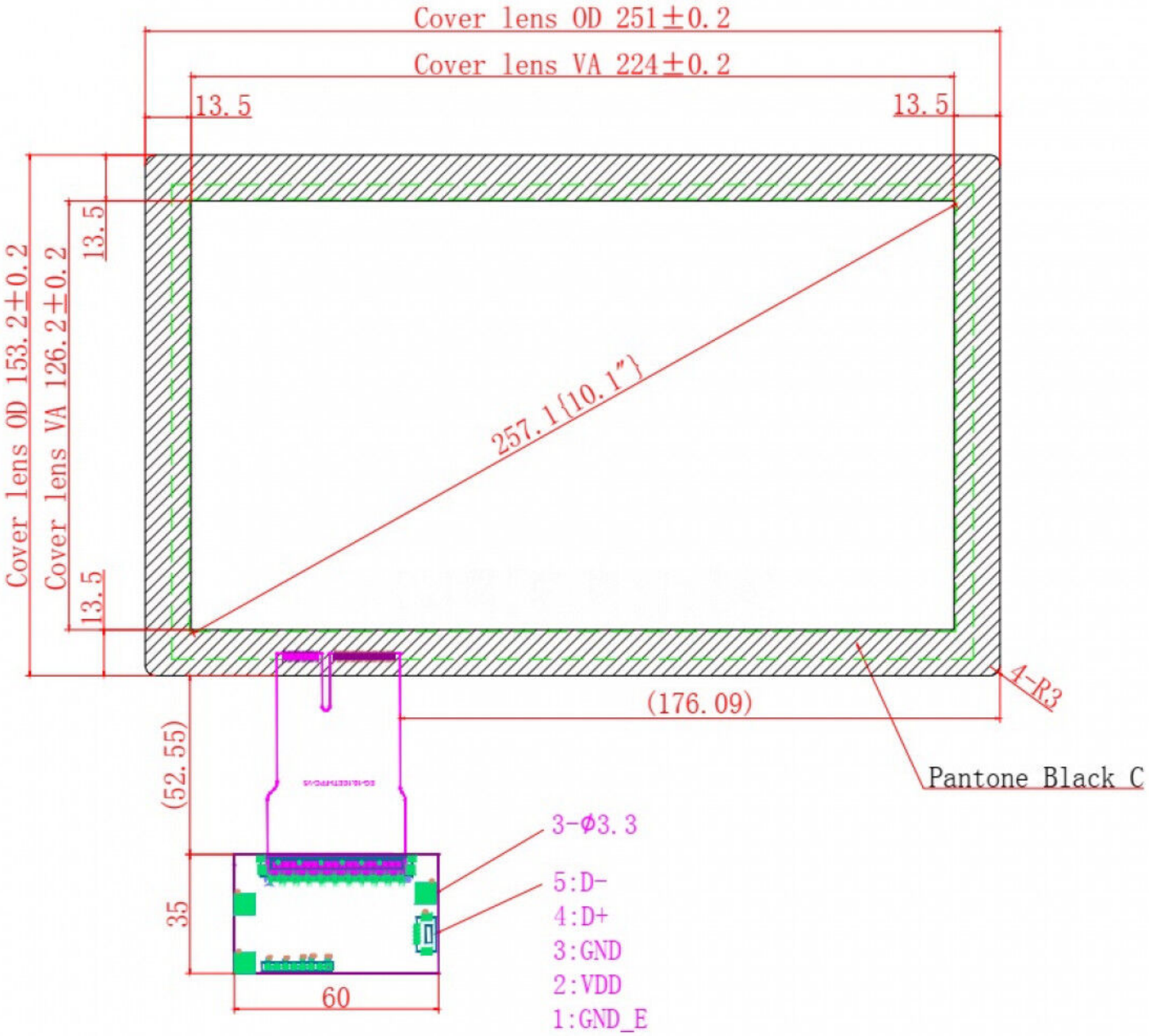
Cover lens OD 251±0.2
Cover lens VA 224±0.2
13.5
13.5
Cover lens OD 153.2±0.2
Cover lens VA 126.2±0.2
13.5
13.5
257.1{10.1"}
4-R3
(176.09)
Pantone Black C
(52.55)
3-Φ3.3
5:D-
4:D+
3:GND
2:VDD
1:GND_E
35
60

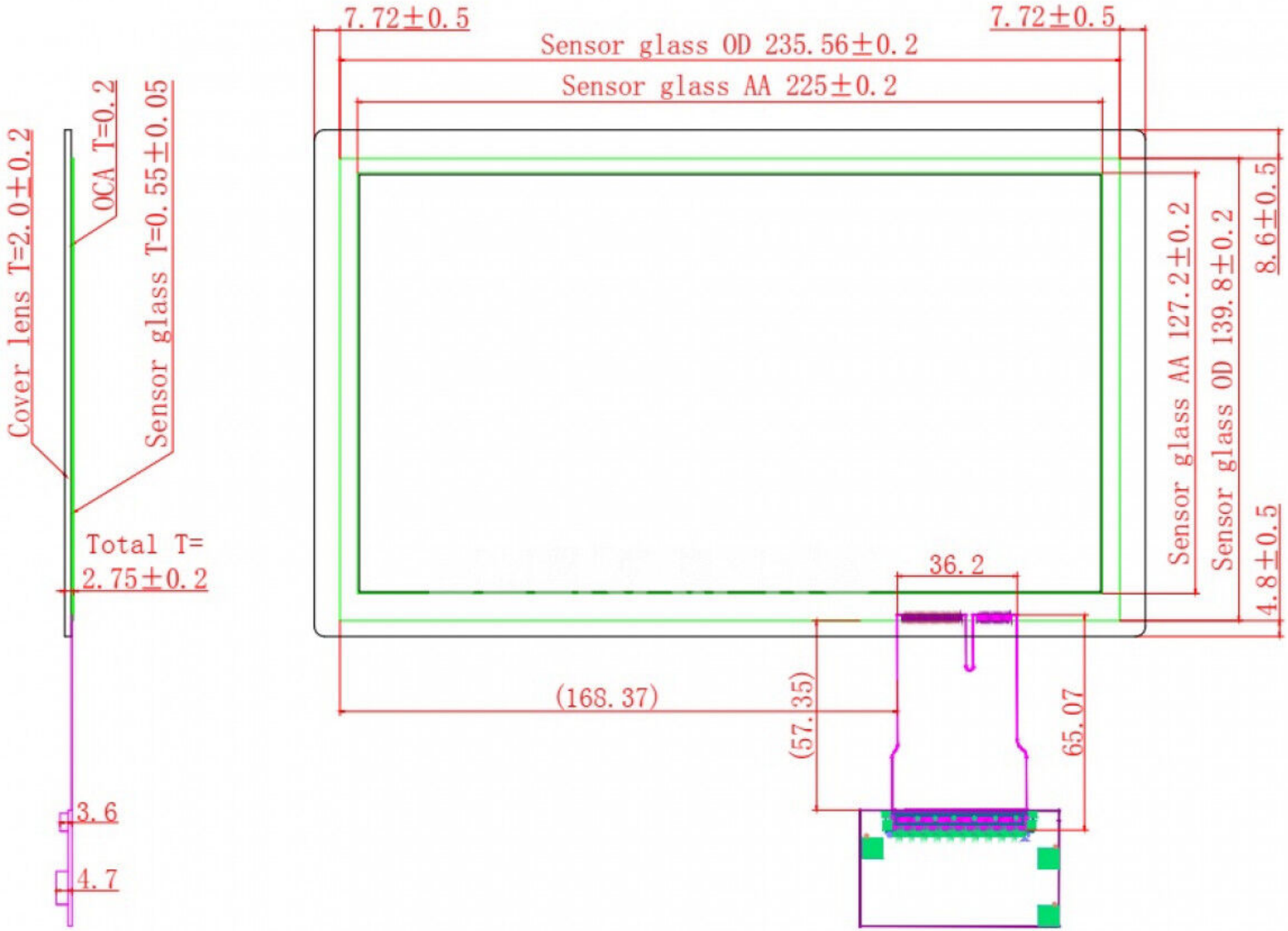
Cover lens T=2.0±0.2
OCA T=0.2
Sensor glass T=0.55±0.05
Total T=
2.75±0.2
3.6
4.7
7.72±0.5
7.72±0.5
Sensor glass OD 235.56±0.2
Sensor glass AA 225±0.2
Sensor glass AA 127.2±0.2
Sensor glass OD 139.8±0.2
8.6±0.5
4.8±0.5
36.2
(168.37)
(57.35)
65.07